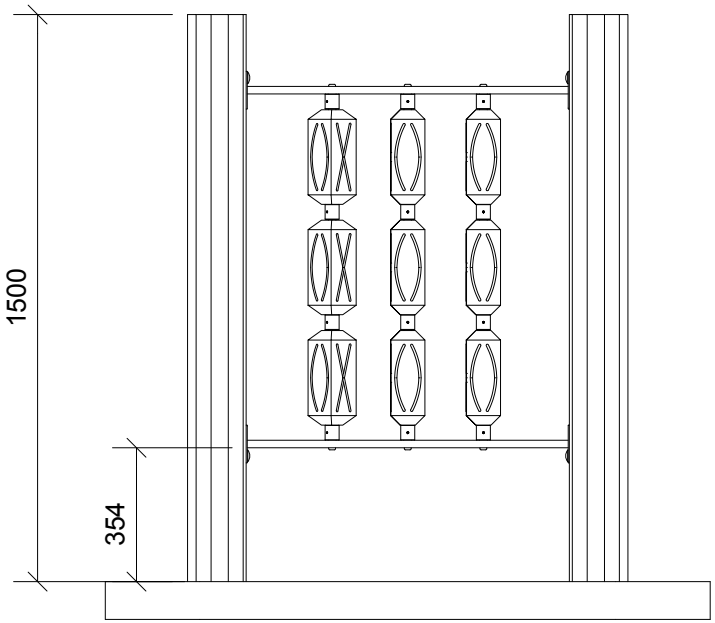

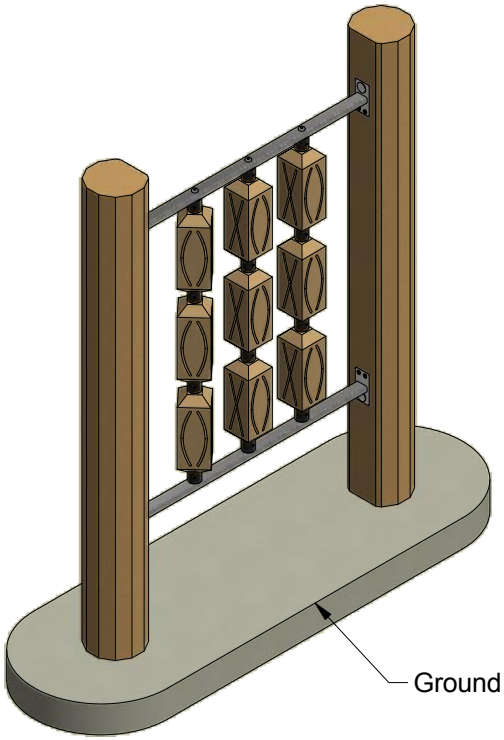

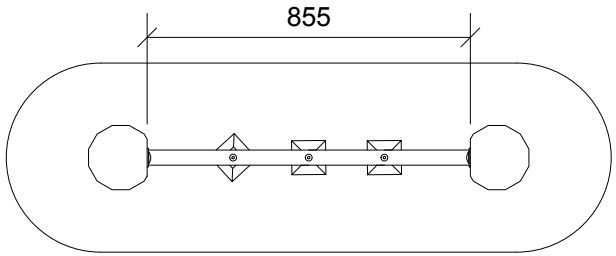

< 600

≥ EN1176

IJslander BV
Oude Dijk 10
8096 RK Oldebroek | The Netherlands
T +31 (0)525 633420 | F +31 (0)525 631067
info@ijslander.com | www.ijslander.com

IJSLANDER

IJslander art. nummer
6806-MAX

DESCRIPTION
Sansevæg stål - Kryds og bolle.

PART NUMBER		MATERIAL			
Z13115					
CREATION DATE	AUTHOR	REVISION	REVISION DATE	REVISION BY	SHEET
24-10-2019	hs	A	17-01-2020	hs	1/2

This drawing is the property of NORNA-PLAYGROUNDS and pursuant to current legislation may not be copied, transferred to or used by any third party. Should this drawing be used, a fee of 10% of the assumed contract price will be charged

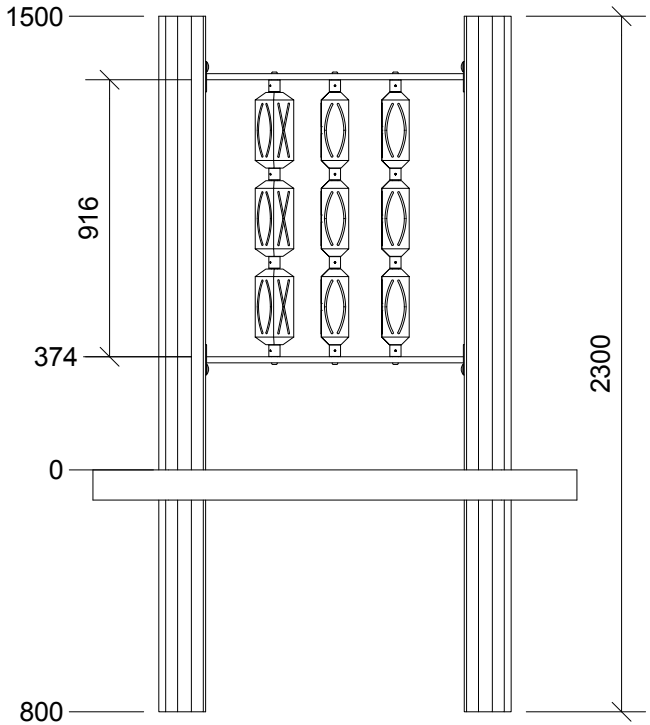

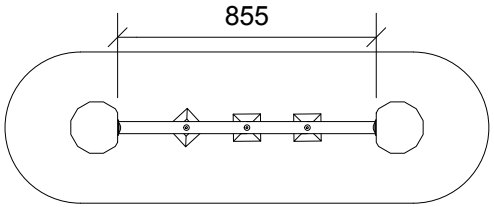

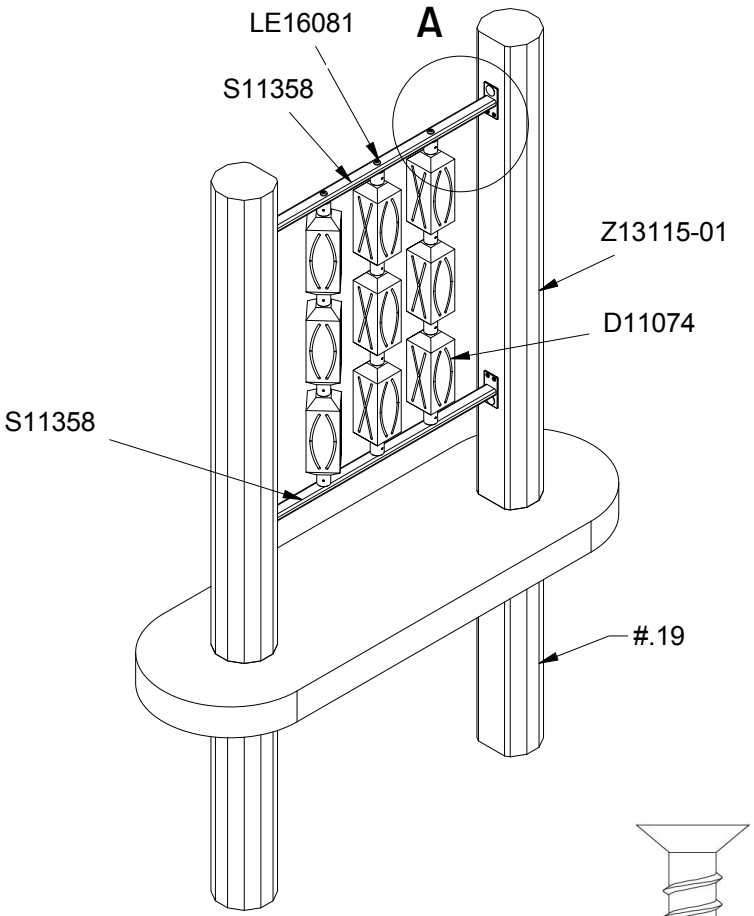

A(1:10)

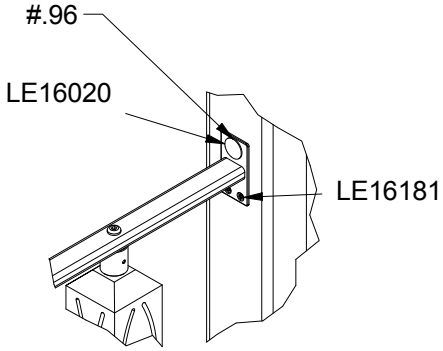

Parts List		
QTY	PART NO	DESCRIP.
2	Z13115-01	160-180-2300-k[50]
2	S11358	Steelbar
3	D11074	
6	LE16081	Buttonhead 10x30mm
8	LE16181	5x35 Ch
4	LE16020	M12 x 140
4	LE16098	M12x1,25mm nut
4	LE16168	M12 - Ø24 mm
4	LE16556	Ø42/38mm

#=Inst.p.No

19
96

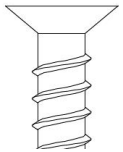

Ch=Countersunk head

This drawing is the property of NORNA-PLAYGROUNDS and pursuant to current legislation may not be copied, transferred to or used by any third party. Should this drawing be used, a fee of 10% of the assumed contract price will be charged

DESCRIPTION: Sansevæg stål - Kryds og bolle.					
PART NUMBER: Z13115		MATERIAL			
CREATION DATE: 24-10-2019	AUTHOR: hs	REVISION: A	REVISION DATE: 17-01-2020	REVISION BY: hs	SHEET: 2/2